# Mobile ECO I-55 (Newer Style) Frame

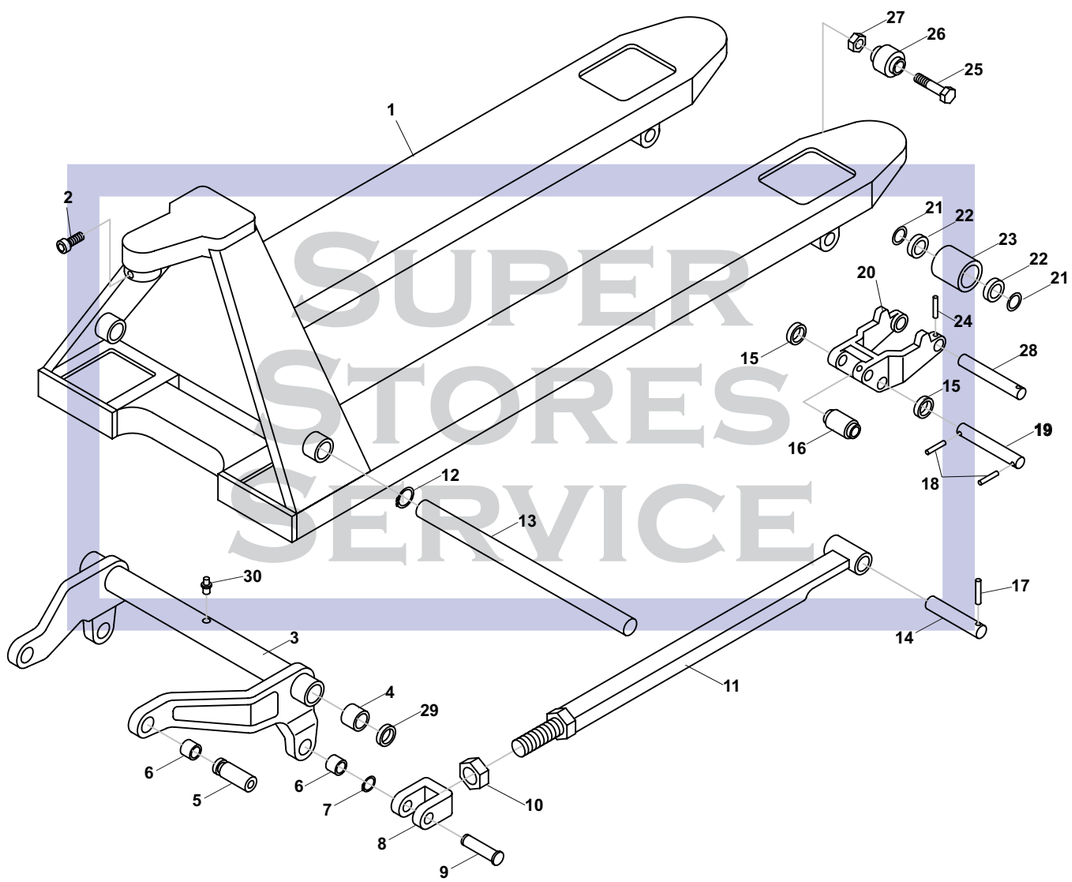


SUPER STORES SERVICE

www.SuperStoresService.com
800-462-2370
Fax: 800-366-5939
SUPER STORES SERVICE

# Mobile ECO I-55 (Newer Style) Frame

| Item | Part No. | Description |
|---|---|---|
| 1 | 18E201 | Frame |
| 2 | 18E202G | Bolt |
| 3 | 18E203 | Lifting Link (27” Frame) |
| 4 | 18E204 | Bushing |
| 5 | 18E205 | Pin |
| 6 | 18E206 | Bushing |
| 7 | 18E208 | Snap Ring |
| 8 | 18E209 | Joint |
| 9 | 18E210 | Pin |
| 10 | 18E211 | Jam Nut |
| 11 | 18E212 | Push Rod (48” Fork) |
| 12 | 18E213 | Retaining Ring |
| 13 | 18E214 | Shaft (27” Frame) |
| 14 | 18E216 | Piviot Axle |
| 15 | 18E217 | Side Exit Roller |
| 16 | 18E218 | Exit Roller |
| 17 | 18E219 | Roll Pin |

| Item | Part No. | Description |
|---|---|---|
| 18 | 18E220 | Roll Pin |
| 19 | 18E221 | Pivot Shaft |
| 20 | 18E222 | Load Wheel Bracket |
| 21 | 18E225 | Washer |
| 22 | 18E226 | Bearing |
| 23 | 18E234N | Load Wheel Assembly, Nylon W/Bearings |
| | 18E234P | Load Wheel Assembly, Ultra Poly Black W/Bearings |
| | 18E234S | Load Wheel Assembly, Steel W/Bearings |
| | GWK-ECO2-LW | Load Wheel Kit, (2) Ultra Poly Load Wheels 70D, W/Bearings, Axles & Fasteners |
| 24 | 18E230 | Roll Pin |
| 25 | 18E231 | Bolt |
| 26 | 18E232 | Entry Roller |
| 27 | 18E233 | Lock Nut |
| 28 | 18E235 | Load Wheel Axle |
| 29 | 18E236 | Washer |
| 30 | 18E237 | Lube Fitting |


All manufacturers’ names, part numbers and descriptions are used for reference purposes only.
We do not imply that any parts are the products of a particular manufacturer. Copyright © 2017 by GPS, Inc. All rights reserved.

All manufacturers’ names, part numbers and descriptions are used for reference purposes only.
We do not imply that any parts are the products of a particular manufacturer. Copyright © 2017 by GPS, Inc. All rights reserved.